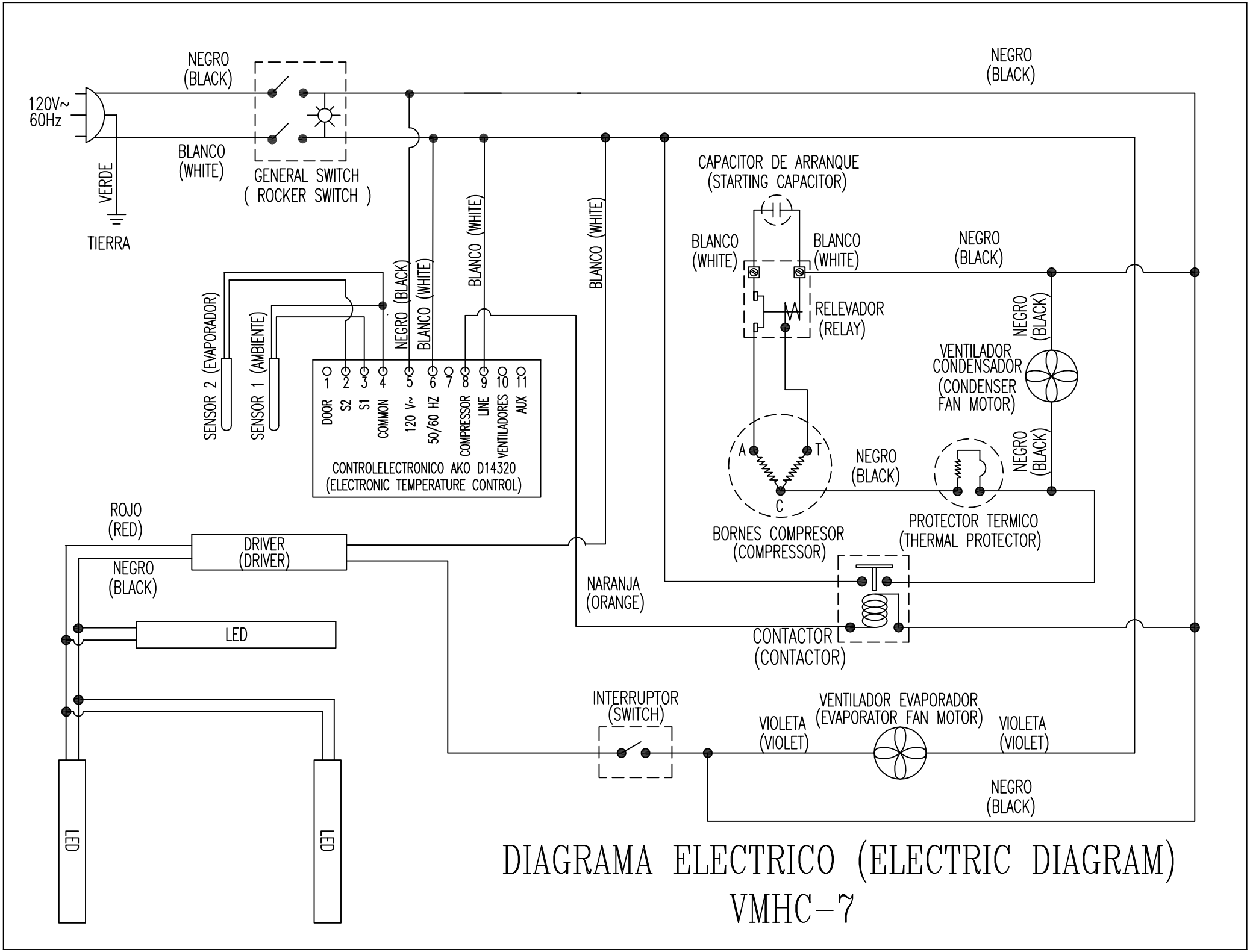

DIAGRAMA ELECTRICO (ELECTRIC DIAGRAM)

VMHC-7